Changes for the Better

SERVICE PARTS LIST FOR MITSUBISHI ELECTRIC PACKAGED AIR-CONDITIONERS

Series : PQRY-P•YGM-A

For use with the R410A

REVISED

June 2007

BWE0518C

INDEX	
Heat Exchanger Unit	Composing Unit Model
PQRY-P400YGM-A	PQRY-P400YSGM-A
PQRY-P500YGM-A	PQRY-P500YSGM-A

MITSUBISHI ELECTRIC

Please change the old catalog (issued Mar. 2007, No.BWE0518B) to this new catalog.
Content of revision : Some of parts are changed.

PQRY-P400YGM-A
PQRY-P500YGM-A

EXTERNAL PARTS

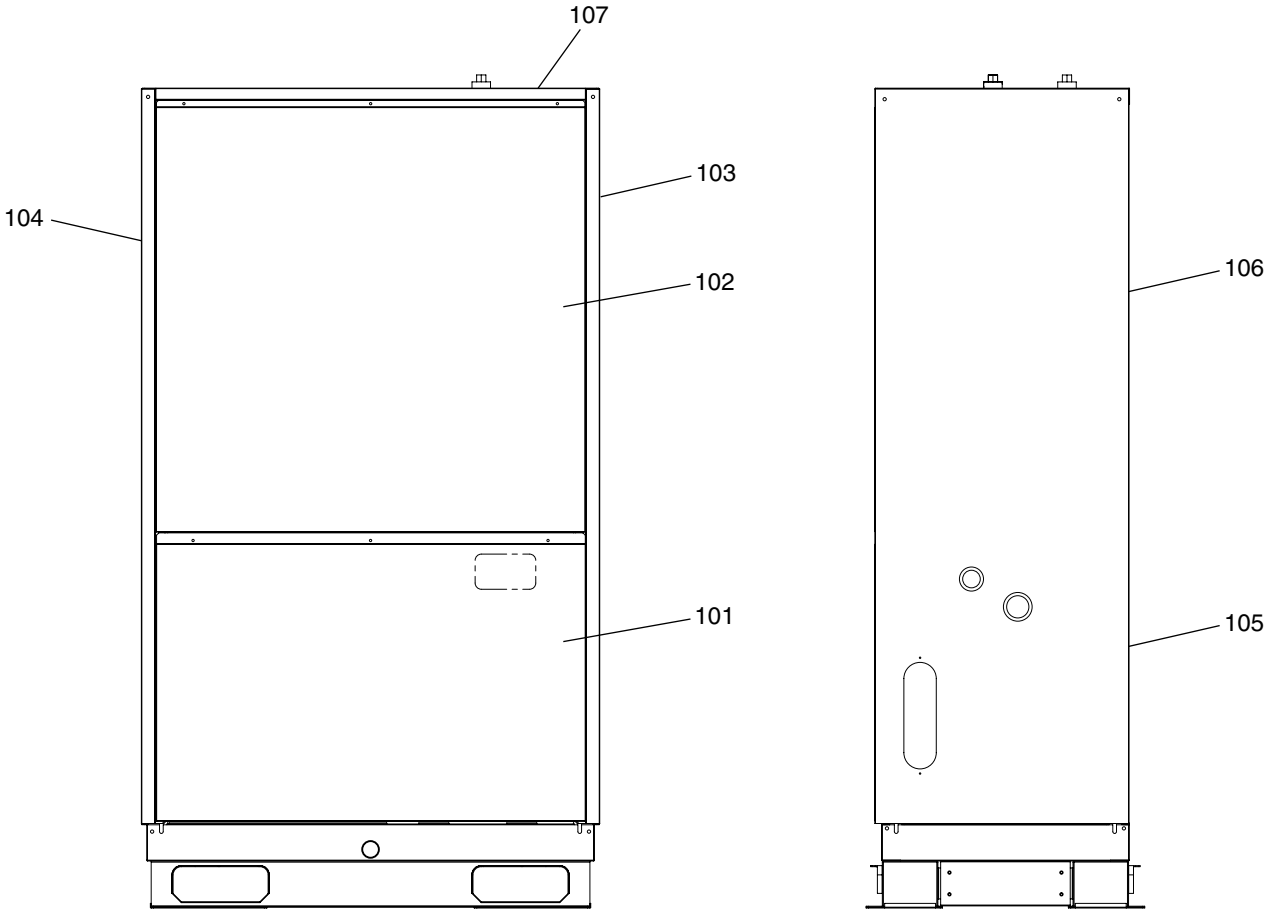

No.	Part No.	G : RoHS Apply Only W : RoHS Apply by Running Change	Part Name	Spec.	PQRY-P400YGM-A	PQRY-P500YGM-A			Dwg. No.	Price	Revision History
101	R63 9F2 651	G	Front panel 1 assy		1	1			W660979G02		
102	R63 4F3 652	G	Front panel 2 assy		1	1			W660980G03		
103	R63 9F2 661	G	Side panel R assy		1	1			W661857G02		
104	R63 9F3 661	G	Side panel L assy		1	1			W661858G02		
105	R63 4F3 678	G	Rear panel 1 assy		1	1			W660981G01		
106	R63 4F3 676	G	Rear panel 2 assy		1	1			W660982G02		
107	R63 9F2 642	G	Top panel		1	1			W660925H01		

FUNCTIONAL PARTS

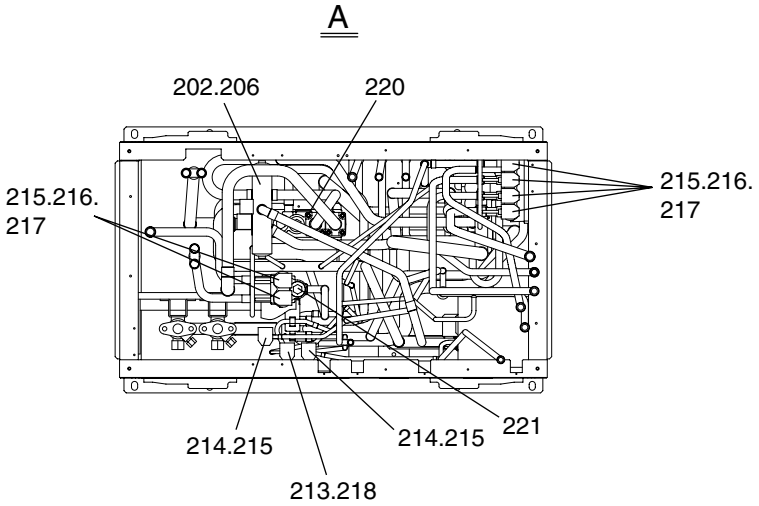

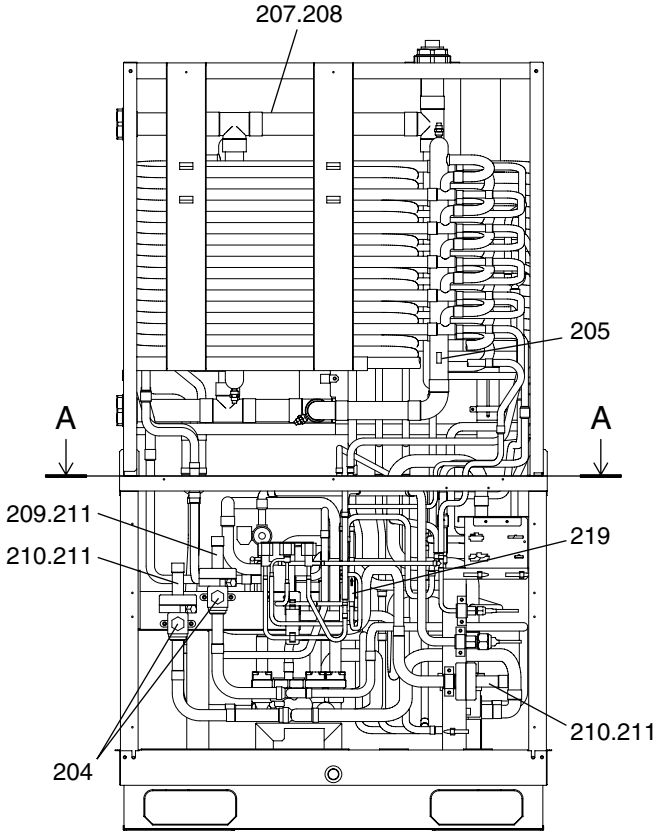

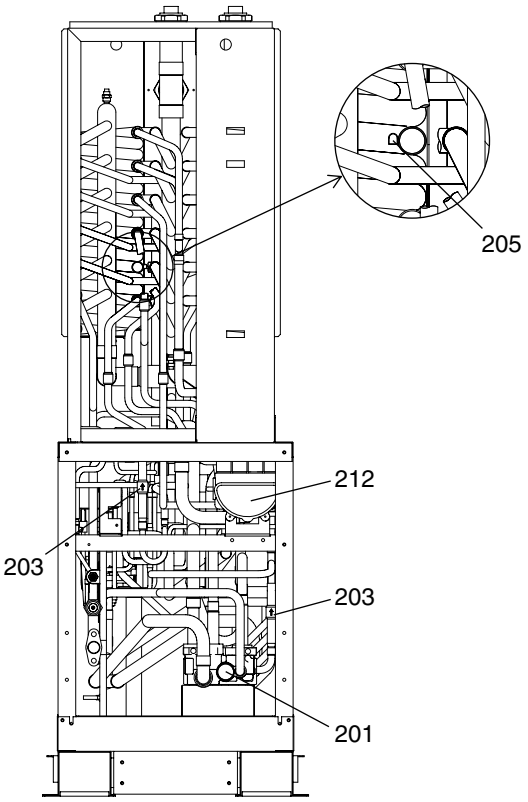

FUNCTIONAL PARTS

No.	Part No.	G : RoHS Apply Only W : RoHS Apply by Running Change	Part Name	Spec.	PQRY-P400YGM-A	PQRY-P500YGM-A			Dwg. No.	Price	Revision History
201	R63 6A7 418	G	Check valve block assy		1	1			W276816G01		
202	R63 006 403	G	Four way valve		1	1			KB00F029G03		
203	R63 R43 418	G	Check valve		2	2			P639165X01		
204	R63 R40 410	G	Ball valve		2	2			P636309X02		
205	R63 670 202	G	Thermistor	NTH3A14 <TH6,TH9>	2	2			P425496X01		
206	R63 002 242	G	Four way valve coil	<21S4a>	1	1			W875295G05		
207	R63 9F2 480	G	Heat exchanger assy		1				W278629G04		
208	R63 9F3 480	G	Heat exchanger assy			1			W277941G04		
209	R63 9F2 441	G	Pipe assy		1	1			W663334G02		
210	R63 9F2 442	G	Pipe assy		2	2			W663334G04		
211	R61 F14 514	G	Packing		3	3			P321009X01		
212	R63 6A7 232	G	Solenoid valve block assy		1	1			W654369G02		
213	R61 024 232	G	Solenoid valve	<SV7c>	1	1			KB00H253G03		C
214	R63 4F3 232	G	Solenoid valve	<SV7a,SV7b>	2	2			P631290X01		
215	R63 Y18 243	G	Solenoid valve coil	<SV4a~4d,SV5a,SV5b,SV7a,SV7b>	8	8			P472012X01		
216	R63 6A7 235	G	Solenoid valve ACS		6	6			P631285X01		
217	R63 6A7 245	G	Fasten part for solenoid valve		1	1			W909209G01		
218	R61 009 243	G	Solenoid valve coil	<SV7c>	1	1			W875295G08		C
219	R63 M05 418	G	Check valve		1	1			P639147X01		
220	R63 7A7 418	G	Check valve block assy		1	1			W276812G01		
221	R63 7A7 232	G	Solenoid valve block assy		1	1			W658302G04		

MITSUBISHI ELECTRIC CORPORATION
HEAD OFFICE: TOKYO BLDG., 2-7-3, MARUNOUCHI, CHIYODA-KU, TOKYO 100-8310, JAPAN

BWE0518C (20070630)